York Region

Environmental Services

April 30, 2014

Rick Nethery
Director
Planning & Building Services
Town of Newmarket
395 Mulock Drive
Newmarket, Ontario L3Y 4X7

Dear Mr. Nethery:

Re: Request for Exemption of Site Plan Approval
Newmarket Sewage Pumping Station Upgrades
Our File No.: W03, 78531-EI08010

The Regional Municipality of York is requesting the Town of Newmarket grant an exemption for Site Plan Approval for the proposed upgrades at the Newmarket Sewage Pumping Station located at 360 Bayview Parkway in Newmarket.

The station was constructed in 1985 and despite several equipment upgrades over the intervening years, many of the systems and equipment have reached their life expectancy. The Region is proposing the upgrades to address age, condition related issues and to modernize the control and electrical system to improve reliability, functionality and safety within the station. It is of vital importance that the pumping station operate efficiently and effectively especially during a power outage. The two existing generators installed inside the station building are planned to be replaced with a single emergency, diesel fuelled generator installed outside of the station. The incoming electrical power supply is transformed from 44,600 Volts down to 600 Volts at an electrical substation that is installed outside of the pumping station. To augment the reliability of the station, the electrical substation be replaced as well.

The proposed emergency generator will be installed to the east of the station on a concrete pad at grade with approximate dimensions of 9.4m by 3.9m. The generator will be inside a steel sound attenuating enclosure approximately 8.8m by 3.9m by 3.7m high. The diesel fuel is contained in a fuel tank that is integral with the generator base frame. The total weight of the generator with enclosure and fuel is approximately 30,000kg. Please refer to the attached drawing *E-621* detailing the dimensions and configuration of the generator. The Generator has been selected to meet, or exceed, MOE guidelines for both noise and air emissions. This should provide an overall improvement to the environment during operation of the generators, since generator technology has improved significantly over the years since the original construction of the facility.

The Regional Municipality of York, 17250 Yonge Street, Newmarket, Ontario L3Y 6Z1
Tel: 905-830-4444, 1-877-464-9675 ·Fax: 905-830-6927
Internet: www.york.ca

To reduce the visual impact of the generator enclosure from the residential neighbourhood and surrounding area, we are enhancing the facility with landscaping, which includes planting a live visual screen as shown on the attached site plan drawing, *C-001*. Furthermore, a fence will also provide additional visual screening, especially during the growth period of the plantings. Finally, the generator enclosure will be supplied in a colour chosen to blend into the environment.

The existing substation will be replaced with an electrical mini-substation in the same location. The proposed substation is smaller than the existing substation and will be installed on a concrete pad on-grade behind the existing barrier wall. Please refer to attached drawing *E-109* for the layout and dimensions of the proposed mini-substation. It is expected that the reduced footprint will improve the overall visual impact of the substation to the surrounding neighborhood.

Building Permit Application (*ref 2014-00116*) has been submitted to the Town of Newmarket for their review and approval. Construction is estimated to commence in June 2014 and completed by the end of December 2015. The work to construct the base pads for both pieces of equipment is expected to be approximately 2 weeks in duration. The equipment will be placed on the respective pads in one day followed be approximately eight weeks of wiring and cable connection.

We trust this information is satisfactory. We would be willing to meet with you to discuss this request. Also, if you require further information, please contact me at 905-830-4444 extension 73018.

Sincerely,

James Steele, P.Eng. PMP
Manager, Engineering

SR/aa

Attachments (5) Aerial Photo
Enclosure detail
Drawing C-001
Drawing E-621
Drawing E-109

Copy to: Rick Jarvis, Project Manager, AECOM

YORK-# 5486826

Proposed Generator Location
Proposed Minisub Location
Bayview Pkwy
Tom Taylor Trail
Nokidaa bike trail
Haines Rd
Elgin St
Rockway Ct
50 m
100 ft

Image shown may not reflect actual package

SOUND ATTENUATED ENCLOSURES FOR C27 and C32 GENERATOR SETS

These sound attenuated, factory installed enclosures are designed for safety and aesthetic value. Rugged construction provides weather protection and the ability to withstand exposure to the elements.

FEATURES

ROBUST/HIGHLY CORROSION RESISTANT CONSTRUCTION

- Environmentally friendly, polyester powder baked paint in Caterpillar yellow.
- Zinc plated or stainless steel fasteners
- 14 gauge steel construction
- Pitched roof for improved rain ingress protection
- Critical grade internally mounted muffler/exhaust system
- Vibration spring isolators
- 75 dBA at 7m

EXCELLENT ACCESS

- Control panel mounted on left side or right side of package
- Large cable entry area for ease of installation
- Left hand or right hand bottom entry access to power cable bus or circuit breaker
- Double doors on both sides
- Lube oil and coolant drains piped to exterior of enclosure and terminated drain valves

OPTIONS

- Interior AC lighting system and AC receptacles (interior and exterior)
- AC distribution box
- Interior DC lighting system with automatic shutoff timer
- Cold weather bundle, including motorized louvers (powered closed), back draft dampers and enclosure space heater
- Yellow (default), white, grey, or beige paint
- 1000 gal., 2000 gal., 3600 gal. fuel tanks
- 120 mph wind loading

SECURITY AND SAFETY

- Lockable access doors with standard key utilization
- Cooling fan and battery charging alternator fully guarded
- Oil fill and battery can only be reached via lockable access
- External fuel connections.
- Externally mounted emergency stop button
- Designed for spreader-bar lifting to ensure safety

CERTIFICATIONS

- UL Listed
- Seismic certification per applicable building codes: IBC 2000, IBC 2003, IBC 2006, IBC 2009, IBC 2012 CBC 2007
- IBC certifiable for 120 mph wind loading
- Tested and analyzed in accordance with: ASCE 7-98, ASCE 7-02, ASCE 7-05, ICC-ES AC-156

ENCLOSURES

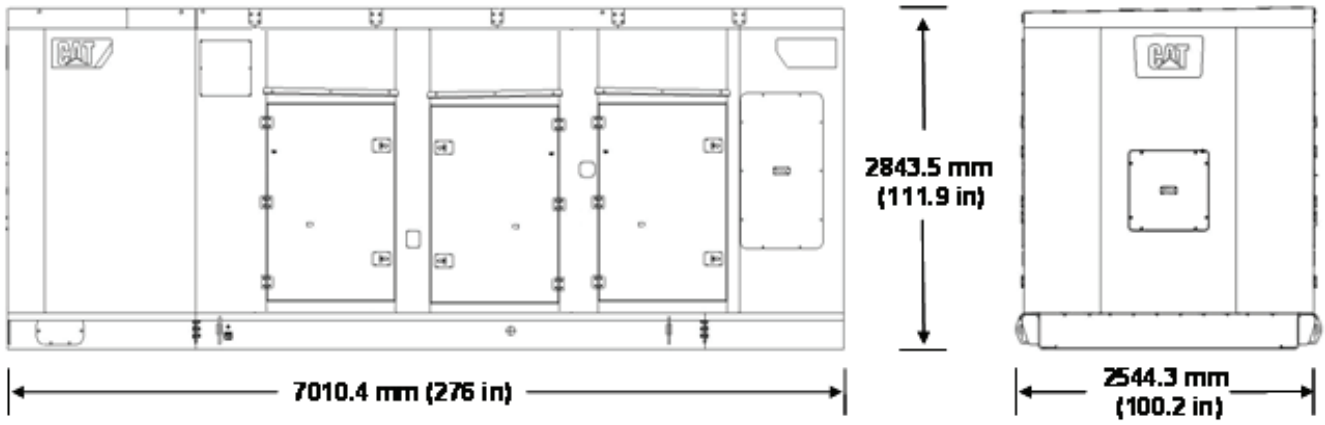

Note: For reference only – do not use for installation design. Please contact your dealer for exact weights and dimensions.

Package Dimensions and Weights

Length	7010.4 mm	276.0 in
Width	2544.3 mm	100.2 in
Height	2843.5 mm	111.9 in
Approx. Enclosure Weight (with C27package)	9,478 kg	20,895 lbs
Approx. Enclosure Weight (with C32 package)	10,661 kg	23,503 lbs

Information contained in this publication may be considered confidential. Discretion is recommended when distributing.
Materials and specifications are subject to change without notice.
CAT, CATERPILLAR, their respective logos, “Caterpillar Yellow,” the “Power Edge” trade dress as well as corporate and product identity used herein, are trademarks of Caterpillar and may not be used without permission.

www.Cat-ElectricPower.com
©2013 Caterpillar
All rights reserved.

PLANT LISTS:

Trees

KEY	BOTANICAL NAME	COMMON NAME	HEIGHT	SPAC'ng	CALIPER	ROOT	REMARKS
10 Pg1	Picea glauca	White Spruce	1.80 m	as/plan	---	W.B.	FULL FORM

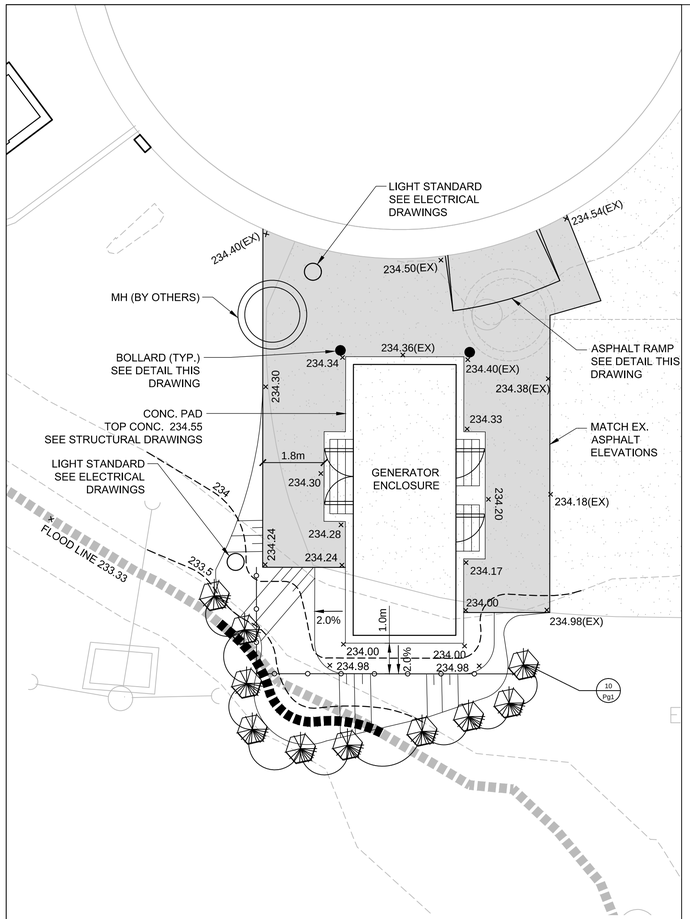

GRADING DETAIL

1:100

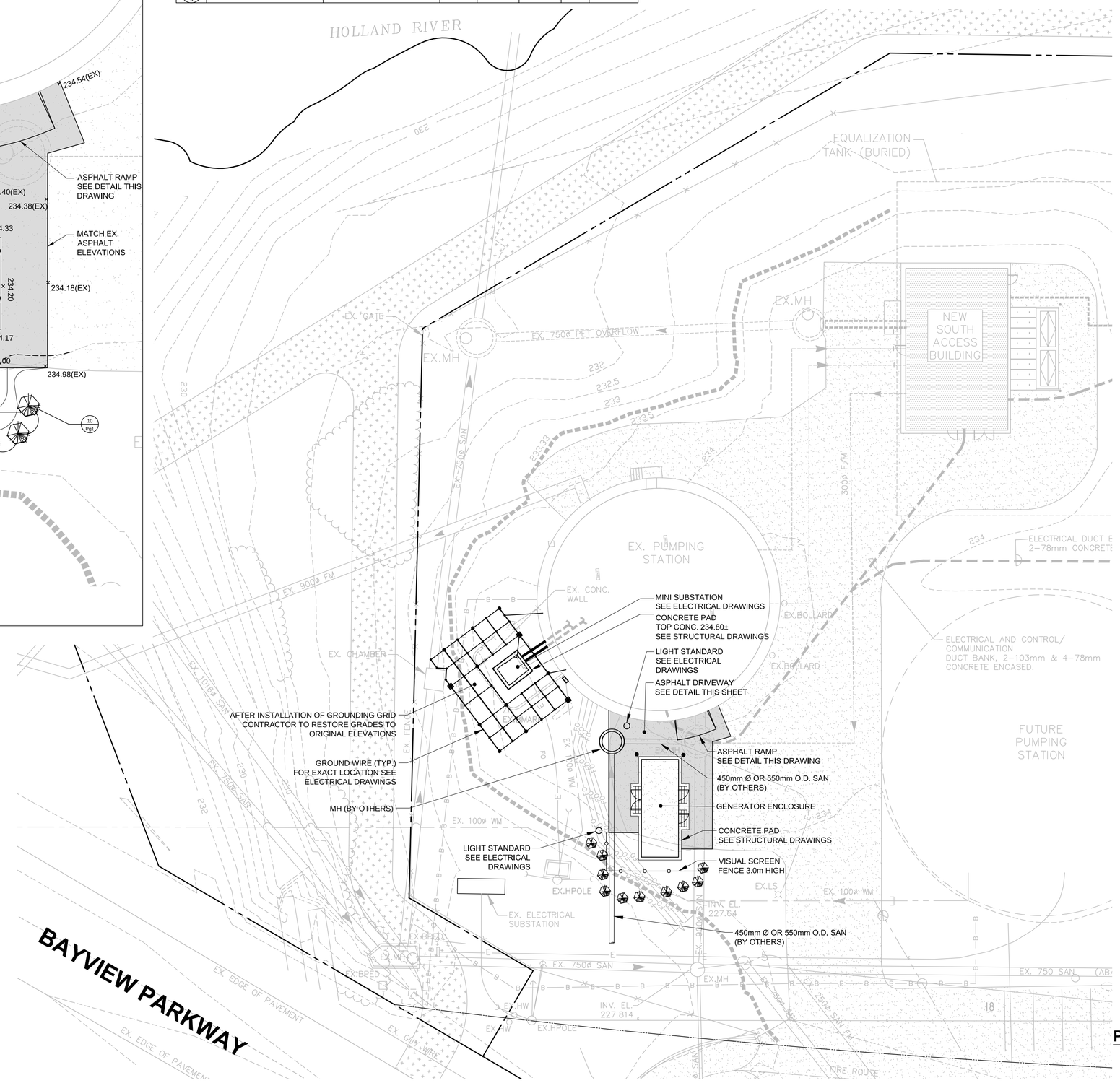

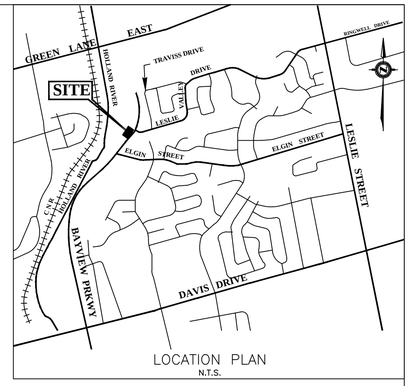

LOCATION PLAN

N.T.S.

LEGEND:

	ASPHALT
× 234.28	ELEVATION
× 234.15(EX)	EXISTING ELEVATION TO REMAIN
	PROPERTY LINE
	EASEMENT
234	CONTOUR
	VISUAL SCREEN FENCE 3.0m HIGH
	2.5:1 MAX SLOPE
	CONIFEROUS TREE
EX. 100ø WM	EXISTING WATERMAIN
EX. 900ø SAN	EXISTING SANITARY SEWER
EX. 900ø FM	EXISTING FORCEMAIN
E	EXISTING ELECTRICAL CABLE
B	EXISTING BELL LINE
FO	EXISTING FIBER OPTIC AND HIGH VOLTAGE CONDUITS
	EXISTING FENCE
233	EXISTING CONTOUR
	REVISED FLOOD LINE ELEV = 233.33
	EXISTING FLOOD LINE ELEV = 233.33
EX.LS	EXISTING LIGHT STANDARD
EX.MH	EXISTING MANHOLE
EX.HPOLE	EXISTING HYDRO POLE
EX.BPED	EXISTING BELL PEDESTAL
EX.HW	EXISTING HAND WELL
EX.BMARK	EXISTING BENCHMARK LOCATION
	EXISTING BUSHLINE
	EXISTING ASPHALT DRIVEWAY
	EXISTING TRAIL

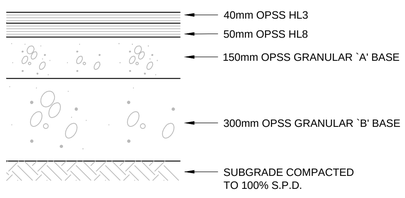

ASPHALT DRIVEWAY

N.T.S.

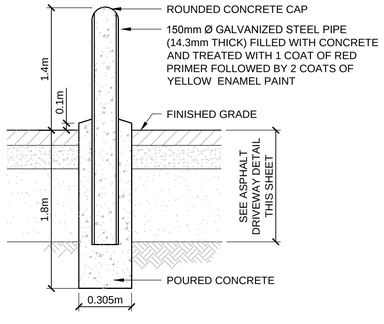

BOLLARD

N.T.S.

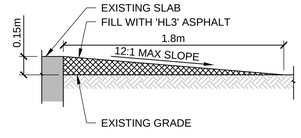

ASPHALT RAMP

N.T.S.

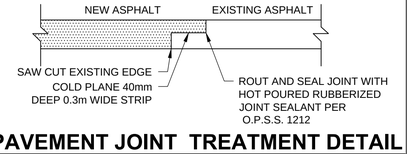

PAVEMENT JOINT TREATMENT DETAIL

N.T.S.

0 5 10 m

1:200

NOTE:
THE LOCATION OF UTILITIES IS APPROXIMATE ONLY, AND THE EXACT LOCATION SHOULD BE DETERMINED BY CONSULTING THE MUNICIPAL AUTHORITIES AND UTILITY COMPANIES CONCERNED. THE CONTRACTOR SHALL PROVE THE LOCATION OF UTILITIES AND SHALL BE RESPONSIBLE FOR ADEQUATE PROTECTION FROM DAMAGE DURING CONSTRUCTION.

AECOM

LICENSED PROFESSIONAL ENGINEER R.P. JARVIS 90278904 PROVINCE OF ONTARIO

No.	DATE	REVISIONS	BY
0	2014-03	Issued for Tender	R.J.

York Region Environmental Services

DESIGN R.J.	NEWMARKET SEWAGE PUMPING STATION UPGRADES	DWG. NO. C-001
DRAWN D.B.		CONT. NO. T-13-58
CHECKED R.J.	SITE PLAN	SHEET NO. 5

Last saved by: SABIRA(2014-04-23) Last Plotted: 2014-04-23
Filename: \\CATRT4VFP001\PROJECTS\60277900\000-CADD\040 CADD-BIM WIP\02-SHEETS\C\60277900-SHT-C-001.DWG

GENERATOR CONTROL PANEL- REAR MOUNTED
AIR FLOW REQUIREMENT-
COOLING AIR- 44,249 CFM
COMBUSTION AIR- 3,245 CFM
TOTAL- 47,494 CFM

MAX WALL PANEL WIDTH 24" FOR WIND REQUIREMENT

*ALL LOAD CENTER WIRING TO BE PIPED IN RIGID CONDUIT - PPPI PROVIDED

PPPI TO EXTEND CRANKCASE FUMES VENT TO DISCHARGE SIDE.
PPPI TO PROVIDE GALVANIZED DRIP TRAY UNDER ENGINE AND SEPARATE ONE FOR FUEL / WATER SEPARATOR.
PPPI DOOR CONSTRUCTION TO INCLUDE: GALVANIZED STEEL, WEATHER STRIPPING, SS THRESHOLD AND DRIP EDGE.
DOOR LATCH TO BE DETERMINED.

ITEM	QTY:	DESCRIPTION
1	1	SOUND ATTENUATED ENCLOSURE PACKAGE- GALVANIZED CONSTRUCTION
2	-	4.5"D WELDED INSULATED WALL PANEL
3	1	U.L. 142 BASE TANK- DOUBLE WALL CONSTRUCTION
4	1	1000KW CATERPILLAR C32 GENERATOR SET
5	8	VIBRATION ISOLATOR (CATERPILLAR PROVIDED)
6	1	SS EXHAUST FLEX
7	1	EXHAUST SILENCER- INTERIOR MOUNT W/ HIGH TEMP WRAP
8	1	EXHAUST OUTLET ELBOW- W/ RAIN CAP, SHIPPED LOOSE
9	1	SOUND ATTENUATED INTAKE HOOD W/ FIXED INTAKE LOUVERS
10	1	24VDC MOTORIZED INTAKE DAMPER
11	1	GRAVITY DISCHARGE DAMPER ASSEMBLY
12	14	SOUND ATTENUATION BAFFLE COLUMN
13	4	PERSONNEL ACCESS DOOR- PAD LOCKABLE W/ SS HARDWARE
14	1	DISCONNECT
15	1	6" X 12" CONDUIT ACCESS FOR SERVICE POWER
16	1	37.5KVA, 600-120/240 TRANSFORMER
17	1	SERVICE PANEL- 120/240V 1P3W, W/ 125A MAIN BREAKER
18	6	VAPOR TIGHT FLUORESCENT AC LIGHT FIXTURE
19	3	LIGHT SWITCH W/ WEATHER PROOF COVER (1 FOR EXTERIOR LIGHTS)
20	3	GFCI RECEPTACLE- W/ WEATHER PROOF COVERS
21	2	5KW ENCLOSURE HEATER W/ THERMOSTAT
22	-	-
23	1	CONDUIT ACCESS AREA- 15"W X 30"L
24	2	BATTERY CHARGER (TOROMOUNT PROVIDED)
25	2	STARTER BATTERY BOX (TOROMONT PROVIDED)
26	3	EXTERIOR MARINE LIGHTS
27	1	TRIPLE FUEL / WATER SEPARATOR (TOROMONT PROVIDED)
28	2	REMOTE FUEL SUPPLY AND RETURN FITTINGS, 1" NPT
29	1	SUPPLY CHECK VALVE (NOT SHOWN)
30	1	LEAK DETECTION FLOAT (NOT SHOWN)
31	6	MAIN TANK FUEL FITTINGS & VENTS
32	4	RUPTURE TANK FUEL FITTINGS & VENTS
33	4	LIFTING PROVISION- REMOVABLE
34	2	GROUND LUG
35	1	U.L. CANADA NAMEPLATE
36	1	DISCHARGE SNOW HOOD W/ BIRD SCREENING - SHIPPED LOOSE

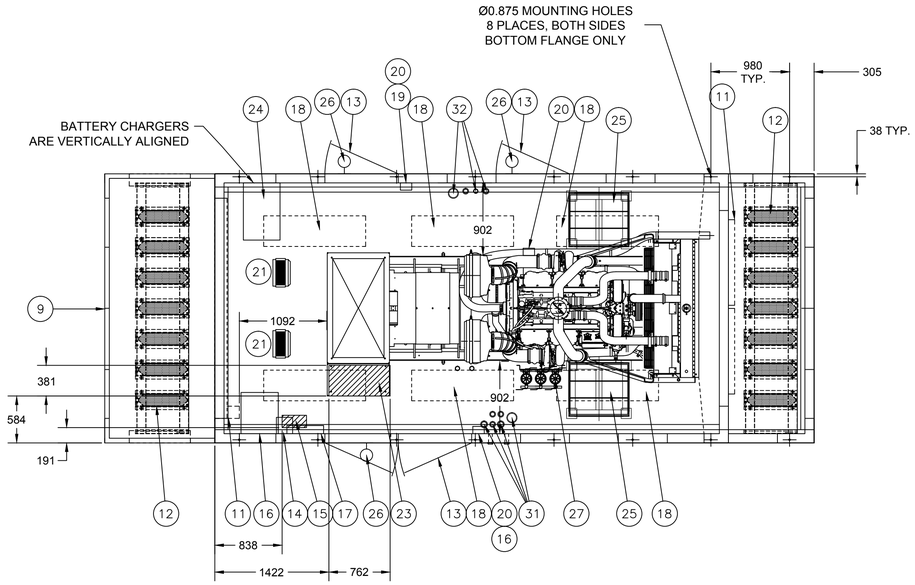

TOP VIEW

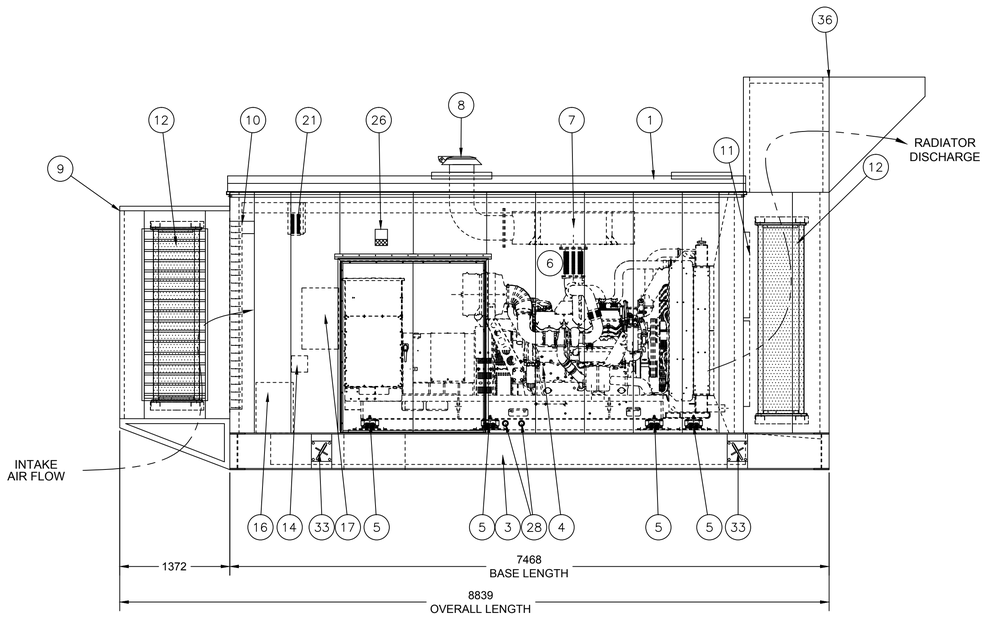

SIDE VIEW

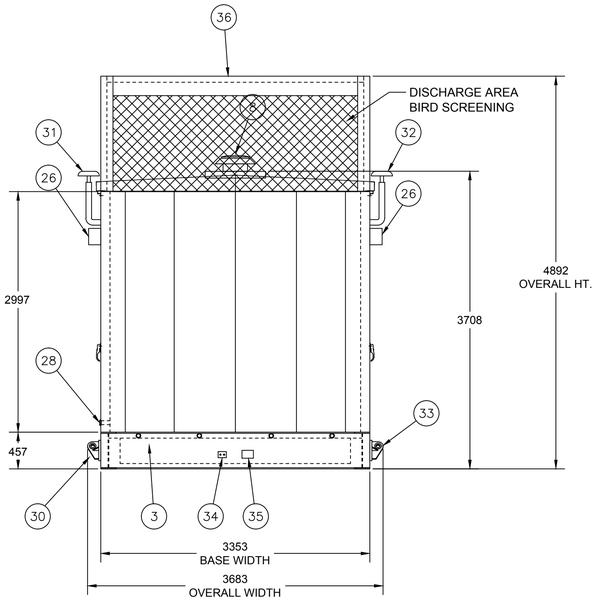

END VIEW

FINISH COLOR:	UNDETERMINED
EST. BASE WEIGHT:	15,300 LBS
EST. GENSET WEIGHT:	18,600 LBS
EST. ENCLOSURE WEIGHT:	17,600 LBS
EST. MISC. WEIGHT:	3,000 LBS
EST. SHIPPING WEIGHT:	54,500 LBS
APPROXIMATE OVERALL DIMENSIONS	
LENGTH:	348"
WIDTH:	145"
HEIGHT:	154"
MAIN TANK CAPACITY:	24 HRS MIN
RUPTURE BASIN CAPACITY:	110%
	1,650 GAL.
SOUND LEVEL:	77dBA @ 23'

NOTES:

1. FUEL FILL TO BE EXTERIOR OF ENCLOSURE. VENT / WHISTLE, EMERGENCY VENT AND SECONDARY VENT TO BE EXTENDED TO THE EXTERIOR OF THE ENCLOSURE. SUPPLY AND RETURN LINE PIPING BTW. GENSET AND FUEL TANK BY GENSET SUPPLIER.
2. ACCESSORIES: 4 LEVEL SWITCHES, EMERGENCY VENT, LEAK DETECTOR, VENT / WHISTLE, MECHANICAL FUEL GAUGE AND FIRE VALVE.
3. FLEXIBLE COOLANT AND LUBRICANT OIL DRAINS EXTENDED TO THE EXTERIOR OF THE ENCLOSURE.
4. CONDENSATE PIPING FROM THE EXHAUST SILENCER TO BE EXTENDED AT 6" FROM ENCLOSURE FLOOR.
5. OIL AND WATER DRAIN GROUP PLUS FUMES DISPOSAL LINES EXTENDED TO THE EXTERIOR OF THE ENCLOSURE.
6. PROVIDE CONTAINMENT FOR FUEL FILL SYSTEM.

NOTE:
THE LOCATION OF UTILITIES IS APPROXIMATE ONLY, AND THE EXACT LOCATION SHOULD BE DETERMINED BY CONSULTING THE MUNICIPAL AUTHORITIES AND UTILITY COMPANIES CONCERNED. THE CONTRACTOR SHALL PROVE THE LOCATION OF UTILITIES AND SHALL BE RESPONSIBLE FOR ADEQUATE PROTECTION FROM DAMAGE DURING CONSTRUCTION.

AECOM

LICENSED PROFESSIONAL ENGINEER
M. K. BHIDE
March 19, 2014
PROVINCE OF ONTARIO

No.	DATE	REVISIONS	BY
0	2014-03	ISSUED FOR TENDER	M.K.B

York Region Environmental Services

DESIGN M.B.
DRAWN Y.O.
CHECKED M.B.

NEWMARKET SEWAGE PUMPING STATION UPGRADES

GENERATOR - OUTDOOR ENCLOSURE

DWG. NO. E-621
CONT. NO. T-13-58
SHEET NO. 77

Last saved by: MENGB(2014-03-25) Last Plotted: 2014-03-25
Filename: \\CATRT4VFP001\PROJECTS\60277900\000-CADD\040 CADD-BIM WIP\02-SHEETS\E\60277900-SHT-E-621.DWG

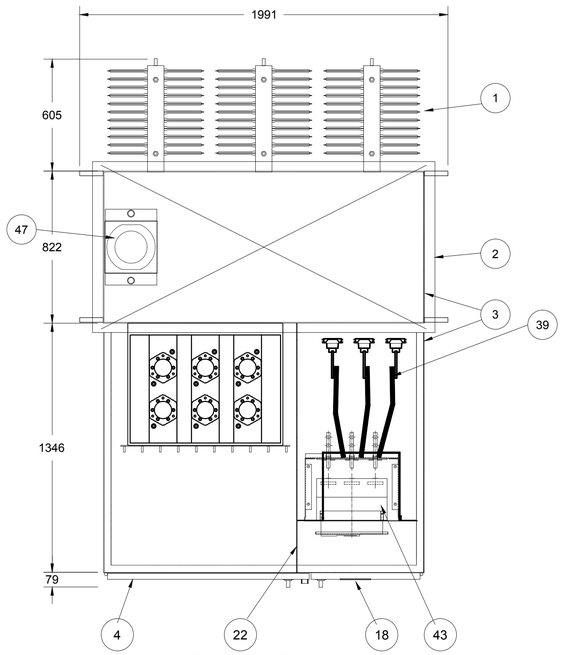

TOP VIEW SHOWN
WITH ROOF REMOVED

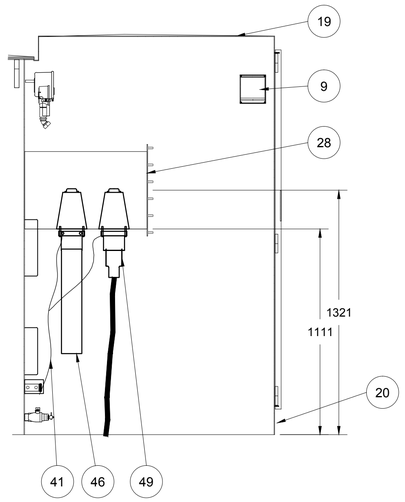

HV LEFT SIDE VIEW
SHOWN WITH DOOR REMOVED

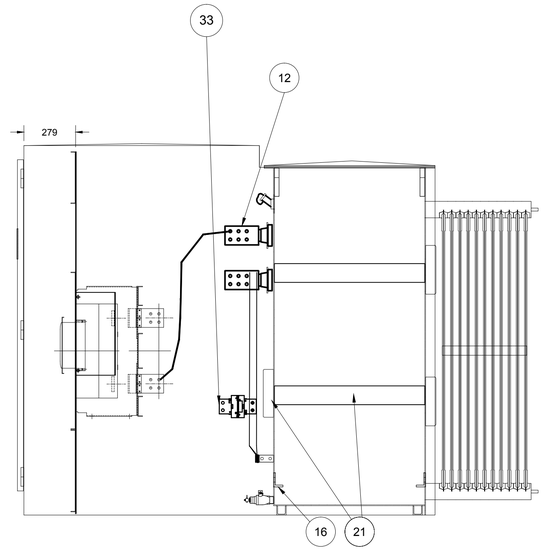

RIGHT SIDE VIEW (LV) SHOWN
WITH SIDE PANEL REMOVED

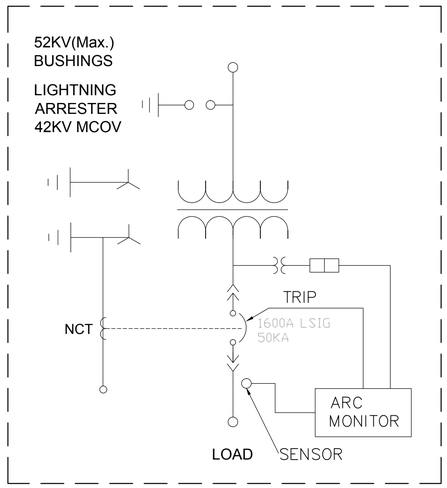

SINGLE LINE DIAGRAM

TRANSFORMER RATINGS:
SIZE 1600KVA
PHASE 3 - 60 CYCLE
TYPE ONAN
H.V. 44000V GY L.V. 600/347GY
TEMP RISE 65°C
TAPS 4- 2 1/2% (2FCAN-2FCBN)
LOSSES: CSA C802.1
C/W TERTIARY WINDING OR 5 LIMB
TRANSFORMER
WINDING-COPPER

ENCLOSURE COLOR - EQUIPMENT GREEN

WEIGHTS:

CORE AND COIL	2825
TANK AND FITTINGS	2370
TRANSFORMER OIL	1940
ATS	245
BREAKERS	80
TOTAL	7460kg

OIL VOLUME 2110 L
NON PCB, CLASS B, TYPE II, MINERAL OIL

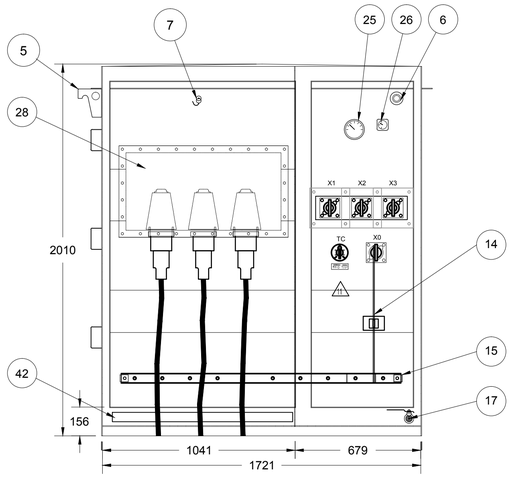

FRONT VIEW SHOWN WITH
DOORS/BARRIERS REMOVED

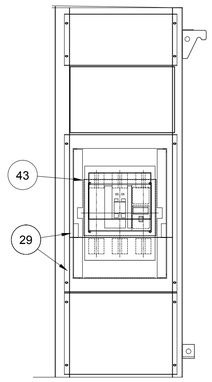

LV FRONT VIEW
BARRIER REMOVED

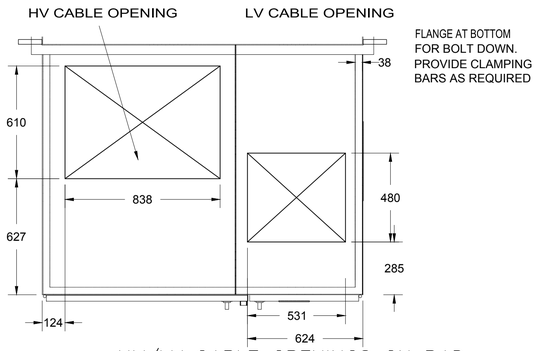

HV/LV CABLE OPENINGS ON PAD

–PAINTED FINISH – EQUIPMENT GREEN
–UNIT BUILT TO CUSTOMER'S SPECIFICATION
AND CSA C227.4–M1978–FIG. 5
IN PART, IEC 265, ANSI 386, CSA D25

BILL OF MATERIAL:

1––TRANSFORMER COOLING RADIATORS (NON–REMOVABLE)
2––TRANSFORMER RIVETED COVER
3––INTERGRAL TANK AND ENCLOSURE
4––TAMPERPROOF ENCLOSURE DOORS(3) C/W GROUNDING, 90° & 110° HOLD OPEN DEVICE,
L.V. DOOR WITH A PADLOCKING HANDLE, H.V. DOOR WITH THE HANDLE AND 2–1/2"–13
PENTAHEAD BOLTS. H.V. DOORS CAN OPEN WITHOUT OPENING THE L.V. DOOR
5––LIFTING LUGS
6––FILLER PLUG –1" NPT BRASS
7––PRESSURE RELIEF VALVE – QUALITROL No. 201–020–08
8––EXTERNALLY OPERATED TAP SWITCH HANDLE C/W WARNING DECAL
9––AL. NAMEPLATE AND CONNECTION DIAGRAM
12––L.V. BUSHINGS – EPOXY TYPE C/W 6 HOLES SPADE
13––L.V. STAINLESS STEEL BUSHING PLATE
14––XO COPPER GROUND BARS
15––GROUND BUS C/W SEVEN 15mm DIA. HOLES
16––JACKING STEPS C/W 25mm DIA. TOWING EYE
17––BRONZE BALL DRAIN VALVE 1" NPT C/W SAMPLING DEVICE
18––ENGLISH WARNING DECALS AS ADOPTED BY THE EEMAC ON THE INSIDE & OUTSIDE OF THE L.V. DOOR
19––ANTI–CONDENSATION MATERIAL ON INSIDE ENCLOSURE ROOF
20––REMOVABLE FRONT LOWER SILL
21––EXTERNAL STIFFENERS
22––REMOVABLE METAL BARRIER BETWEEN L.V & H.V. COMPARTMENT
25––TOP LIQUID TEMPERATURE GAUGE
26––LIQUID LEVEL GAUGE
28––44KV BUSHING BOX INCLUDING 6*52KV (MAX. OPERATING VOLTAGE) BUSHINGS
29––VERTICAL BARRIERS, L.V. COMPARTMENT AND SIDE PANEL
33––NEUTRAL CT
39––FLEXIBLE JUMPER BETWEEN LV BUSHINGS & MAIN BREAKER
41––GROUNDING WIRES FOR L.A. AND CONNECTORS (#6 AWG FOR L.A.)
42––HV CABLE SUPPORT
43––MAIN BREAKER 1600A 3P 600V 50KA LSIG DRAWOUT MANUALLY OPERATED
46––THREE LIGHTNING ARRESTER 42KV MCOV
47––TAMPERPROOF COVER (USE AT MANUFACTURE FOR VACUUM FILLING ONLY)
49––THREE 44KV CONNECTORS (52KV MAX.)

NOTE:
THE LOCATION OF UTILITIES IS APPROXIMATE ONLY, AND THE EXACT LOCATION SHOULD BE DETERMINED BY CONSULTING THE MUNICIPAL AUTHORITIES AND UTILITY COMPANIES CONCERNED. THE CONTRACTOR SHALL PROVE THE LOCATION OF UTILITIES AND SHALL BE RESPONSIBLE FOR ADEQUATE PROTECTION FROM DAMAGE DURING CONSTRUCTION.

AECOM

LICENSED PROFESSIONAL ENGINEER
M. K. BHIDE
March 19, 2014
PROVINCE OF ONTARIO

No.	DATE	REVISIONS	BY
0	2014-03	ISSUED FOR TENDER	M.K.B

York Region Environmental Services

DESIGN M.B.	NEWMARKET SEWAGE PUMPING STATION UPGRADES
DRAWN B.M.	MINISUB GENERAL ARRANGEMENT AND SINGLE LINE
CHECKED M.B.	
DWG. NO. E-109	
CONT. NO. T–13–58	
SHEET NO. 58	

Last saved by: MENGB(2014-03-12) Last Plotted: 2014-03-17
Filename: \\CATRT4VFP001\PROJECTS\60277900\000-CADD\040 CADD-BIM WIP\02-SHEETS\E\60277900-SHT-E-109.DWG